ANYLOAD

CNV100

Conveyor Belt Scale

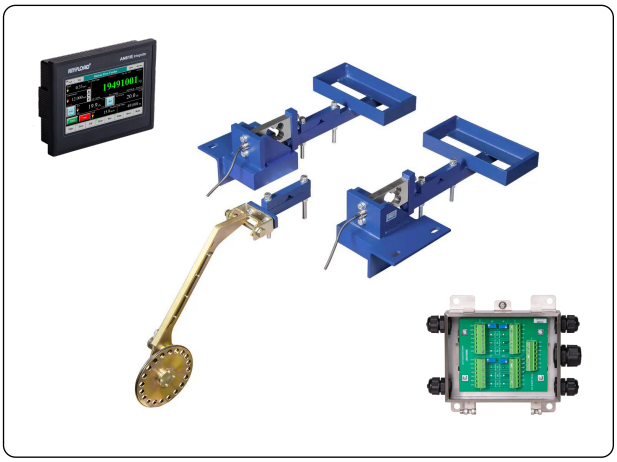



≤1%
Total Error

5000t
Max Per Hour

16-98”
Flexible Width

1-855-269-5623
www.anyload.com

PN-260301-06

CNV Features



AN610 Integrator

Touchscreen belt scale indicator for continuous weighing and flow measurement, delivering stable belt load, flow rate, and totalized weight with high-accuracy processing and anti-vibration filtering.

108DSTP Load Cell

Designed specifically for optimal belt scale weighing performance. Stainless steel material withstands harsh environments, IP68 rating for moisture and dust protection. Single point load cell design maintains precision in off-centre and dynamic loading conditions.

Calibration Trays

Simplify setup and maintenance with trays designed to hold standard test weights.

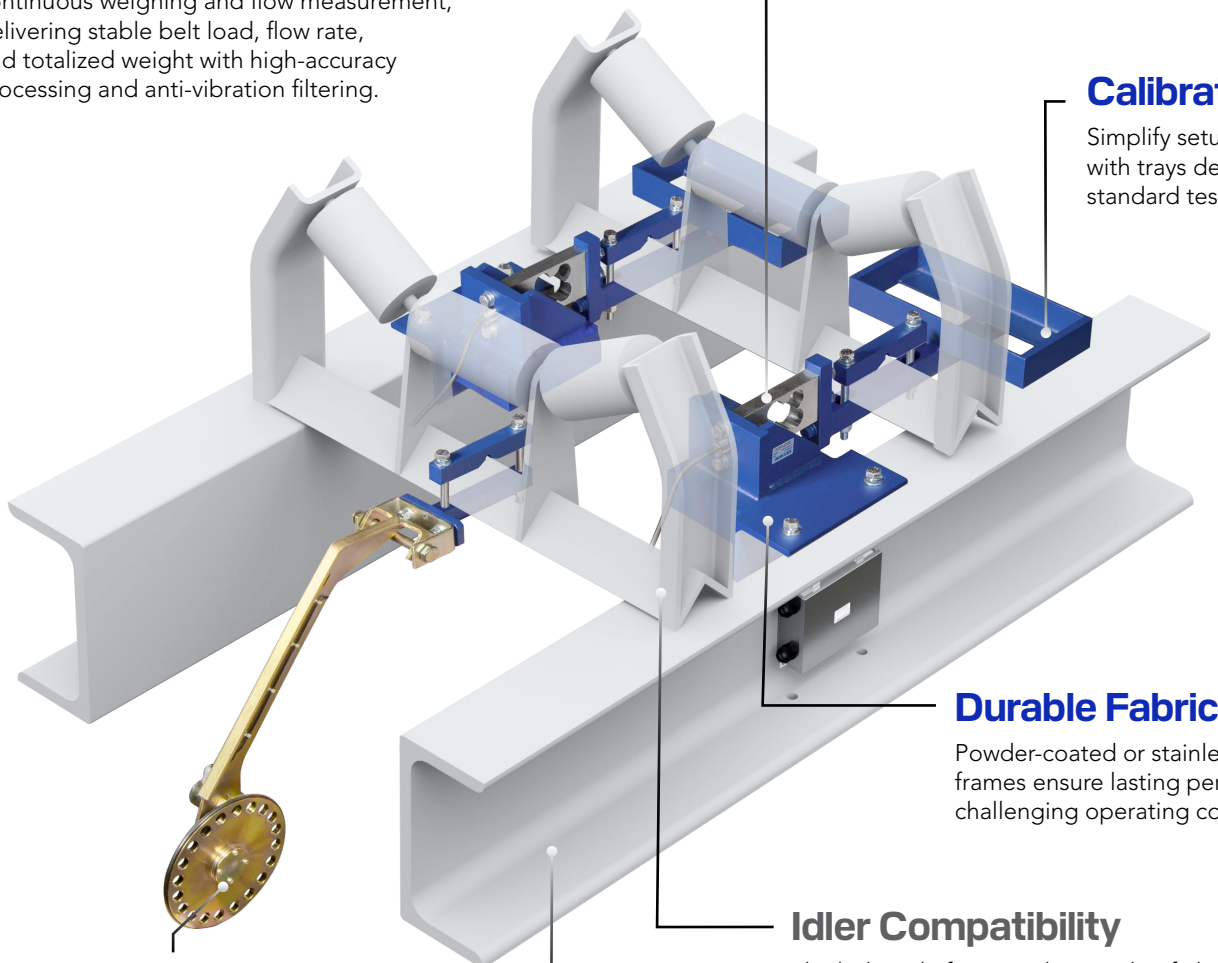

Durable Fabrication

Powder-coated or stainless steel weigh frames ensure lasting performance in challenging operating conditions.

Idler Compatibility

The belt scale frame is designed to fit beneath the vast majority of standard round roller idlers on the market, simplifying installation while maintaining stable, repeatable accuracy.

SPD100 Speed Sensor & Wheel

Accurately track weight throughput at variable conveyor speeds. Light pulse speed sensor delivers reliable speed sensing. Galvanized steel with IP65 dust & moisture resistance. Weld-free mounting bracket for easy installation.

Conveyor Structure

The conveyor structure can be any width. ANYLOAD's one-size-fits-all design can be seamlessly integrated into almost all industrial conveyor designs. No cutting, welding, or other troublesome modifications required.

CNV Versatility

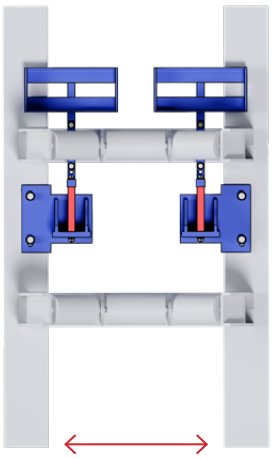

Min. Width: ≥ 16in
(41cm)

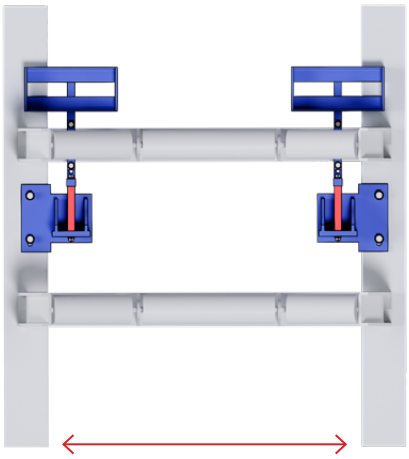

Max. Width: ≤ 98in
(249 cm)

Universal Fit Design

The CNV100 fits conveyor belts from 16 in to 98 in with a single model, eliminating the need for multiple frame sizes, part numbers, or spare inventory. One standardized scale simplifies specifying, stocking, and field installation across a conveyor fleet.

Purpose-Built Modularity

The CNV100 is also expandable from a single idler scale to a 2- or 3-idler weigh bridge for improved stability and accuracy. Adding a second weigh frame effectively doubles the resolution potential, improving repeatability. Unlike many belt scales that require a custom-fabricated multi-idler structure, the CNV100 simply scales by installing additional standard modules, keeping parts common and upgrades straightforward.

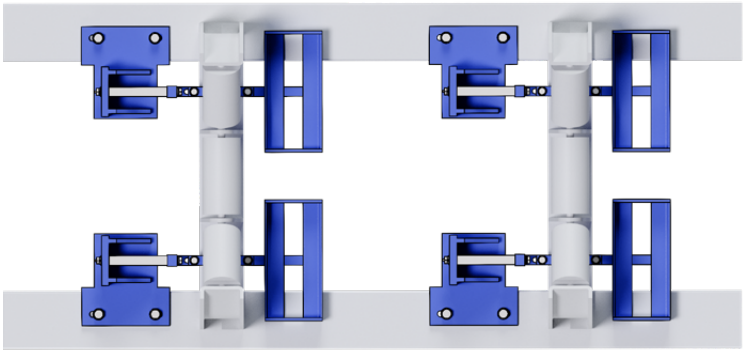

Expandable multi-idler support

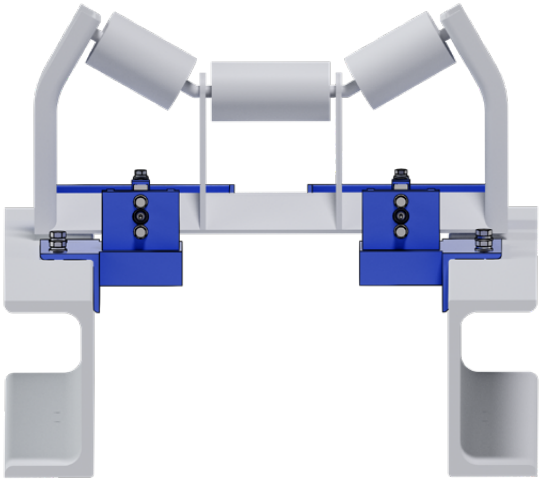

Inward mounting reduces exposure to dust, rocks, and impact damage.

Inward Mounted

Protects critical components from dust, moisture, washdown, and impact (common causes of drift and failures in belt scale installations). By reducing exposed hardware and maintaining proper weigh-zone clearance, it helps prevent belt contact, build-up interference, and misalignment-related errors, while lowering maintenance and unplanned downtime.

Specifications

CNV100
Conveyor Belt Scale

Features:
- Powder-coated mild steel
- Calibration trays included
- Continuous welding

Key Specifications:
- Accuracy: ≤ 1% total error (single idler)
- 5000t per hour (single idler)
- Fits in conveyors 16 in to 98 in width

Options:
- 304 stainless steel weigh frame
- Multi-idler system
- Custom design for special applications

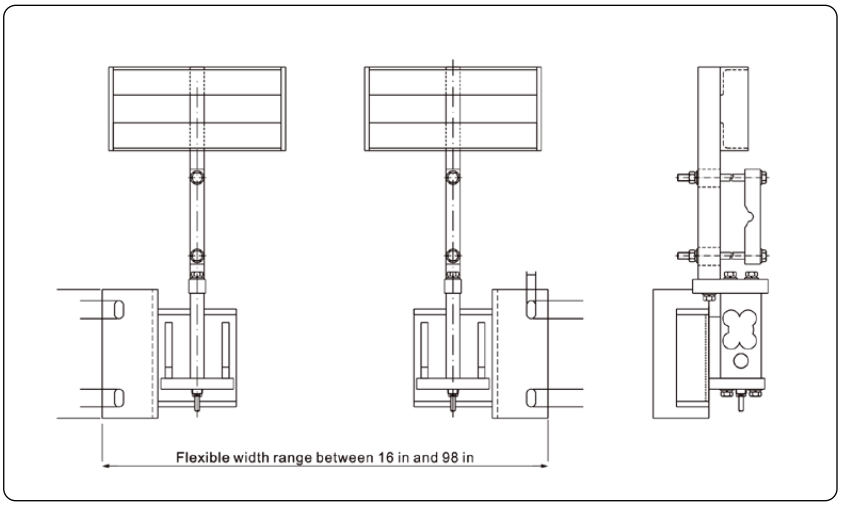

CNV100 Diagram

SPD100
Speed Sensor & Wheel

- Light pulse-based speed monitoring
- Galvanized steel construction
- Anti-skid friction wheel for reliable traction
- 10 pulses per ft (33.3 pulses per m)
- Belt Speed: Max 800 ft/min (4m/sec)
- IP65 dust & moisture protection

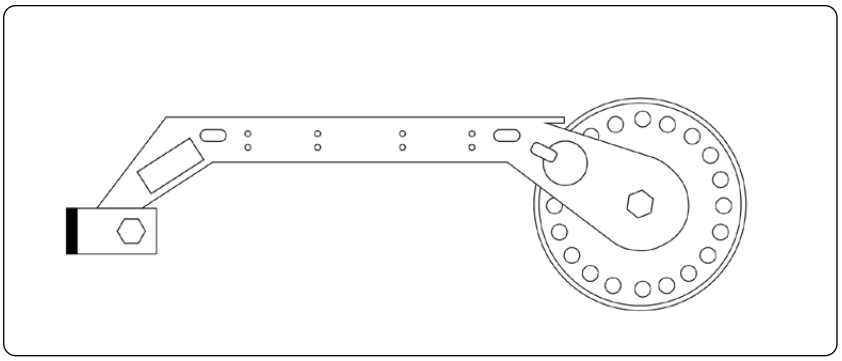

SPD100 Diagram

108DSTP Load Cell
Single-Point, Stainless Steel

Features:
- Single-point design optimized for high-fatigue weighing in harsh environments
- 150% Safe Overload
- 300% Breaking Overload
- IP68 Welded Sealed
- 17-4PH Stainless Steel construction
- Temperature Compensated from 14°F to 122°F (–10°C to 50°C)

Options:
- EPD-coating for fertilizer resistance
- Intrinsic Safety Certified (FM C/US, ATEX, IECEx to Class 1 Div. 1)

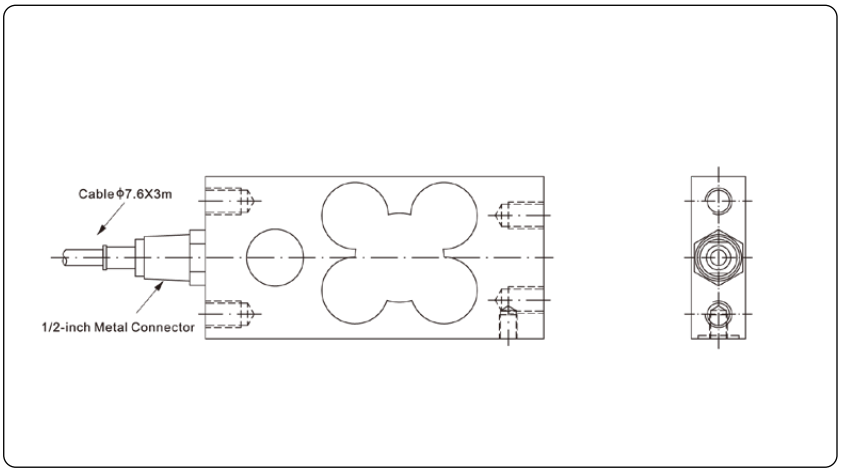

108DSTP Diagram

Purpose-Designed Load Cell

ANYLOAD's belt scale uses the 108DSTP load cell engineered specifically for optimal conveyor weighing, where vibration, impact loading, and off-centre material flow are unavoidable.

- Stainless steel + IP68 protection: The 108DSTP is purpose built for outdoor, dusty, and wet environments, exceeding the IP66–IP67 ratings common on competing belt scales.
- Single-point load cell design: Maintains accuracy under off-centre and uneven loading across the belt (critical for dynamic weighing applications).
- Better performance with fewer compromises: The 108DSTP single point load cell reduces sensitivity to misloading compared to S-beam designs, improving long-term stability and repeatability. And compared to belt scales using single-ended beam load cells, fewer load cells are needed, reducing points of failure while simplifying calibration and service.

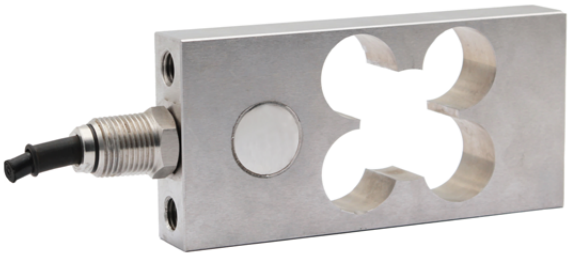

CE ATEX FM APPROVED IECEx RoHS

Applications

Bulk/Aggregates

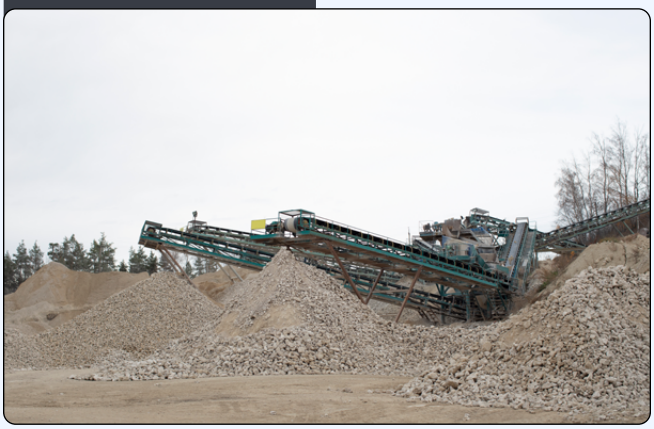

Waste Management & Recycling

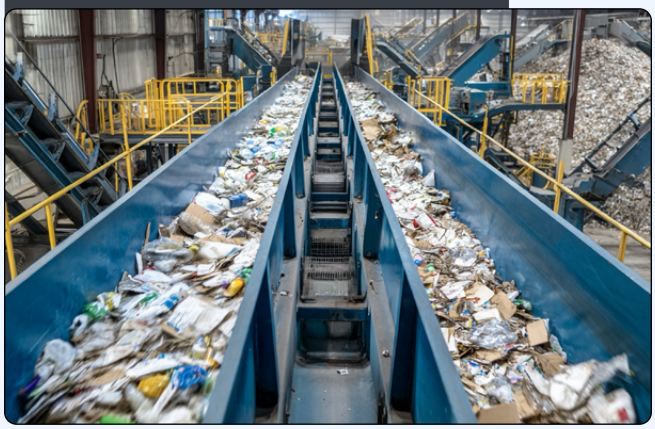

Agriculture



Mining



AN610 Integrator



Communication Protocols

RS-485	Modbus RTU
ETHERNET	Modbus TCP or TCP/IP PROFINET

Specifications	AN610
Power Supply	9 ~ 36 VDC [Recommended: 24 VDC]
Max Power Consumption	15W
Display Type	7 in TFT colour touchscreen
Excitation Voltage	10 VDC, up to 8 x 350 Ω
Measurement Units	lb, Klb, g, kg, t
Resolution	Display: 99,999,999
Non-Linearity	0.005% FS
A/D Sample Rate	400 Hz
IP Rating	IP50
Enclosure Material	Stainless Steel
Operating Temp.	−13°F ~ 113°F / −25°C ~ 45°C
Communication Protocol	RS-485, Profibus-DP, Profinet, Ethernet Modbus TCP
Optional Enclosure for Outdoor Applications: • Stainless Steel • Viewport • IP65 / NEMA 4	

Key Features

- **High-Accuracy, High-Speed Processing**
  Precision ADC with a fast 400 Hz sampling rate captures rapid load changes, delivering stable belt load, flow rate, and totalized weight even under fluctuating conditions.
- **Advanced Anti-Vibration Digital Filtering**
  Configurable filtering minimizes the effects of vibration, impact loading, and mechanical noise, producing more consistent flow measurement.
- **Full-Colour Touchscreen Interface**
  7-inch TFT touchscreen provides fast response and high brightness for clear visibility, allowing operators to easily configure, calibrate, and monitor the system.
- **Integrated Control & Reporting Functions**
  Supports speed sensor input, flow rate calculation, totalizing, PID control outputs, and customizable printer formats for production tracking, batching, and shift-based reporting.
- **Industrial Communication Integration**
  Communication protocol options include:
  RS-485, Profibus-DP, Profinet, Ethernet Modbus TCP.

Ordering Information

Full Package

CNV100-500lb-FP1	1 x CNV100-500lb-SET, 1 x AN610-485-A , 1 x SPD100-A, 1 x J04SS
CNV100-1Klb-FP1	1 x CNV100-1Klb-SET, 1 x AN610-485-A , 1 x SPD100-A, 1 x J04SS

Load Cell Assembly Only

CNV100-500lb-SET	1 x CNV100-FRAME-A-L , 1 x CNV100-FRAME-A-R, 2 x 108DSTP-500lb
CNV100-1Kb-SET	1 x CNV100-FRAME-A-L , 1 x CNV100-FRAME-A-R, 2 x 108DSTP-1Klb

Load Cell Only

108DSTP-500lb	1 x 108DSTP-500lb, Stainless Steel Load Cell
108DSTP-1Klb	1 x 108DSTP-1Klb, Stainless Steel Load Cell

Speed Sensor & Wheel Only

SPD100-A	1 x SPD100-A Speed Sensor & Wheel

Integrator Only

AN610-485-A	1 x AN610 with RS-485

Options:

Integrator	AN610-EMT-A	AN610 with Ethernet Modbus TCP
	AN610-PFD-A	AN610 with Profibus DP
	AN610-PFN-A	AN610 with Profinet
	AN610-CASE-01	Stainless Steel Enclosure for AN610

You may also need:

808 Series	808AH, 808BH, 808CH Remote Display
WL900	Wireless RF Signal Transmitter & Receiver
TWCM1	Test Weights
CAHP20	Cable Armor, Flexible PVC exterior with a galvanized steel interior

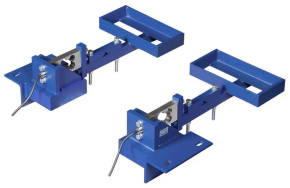

CNV100 SET
Load Cell Assembly



108DSTP
Single Point Load Cell



SPD100
Speed Sensor & Wheel



AN610
Integrator



AN610 CASE-01
Stainless Steel Case



808 SERIES
Remote Display



TWCM1
Test Weights



CAHP20
Cable Armor

Sold By:

ANYLOAD®

1-855-269-5623
www.anyload.com

2026 Anyload Weigh & Measure Inc. Specifications subject to change without notice.

ANYLOAD®

1-855-269-5623

www.anyload.com

ISO 9001:2015 ISO 45001:2018 ISO 14001:2015

PN-260301-06

© 2026 Anyload Weigh & Measure Inc.
Specifications subject to change without notice.