108TA; 108TAUN

Aluminum

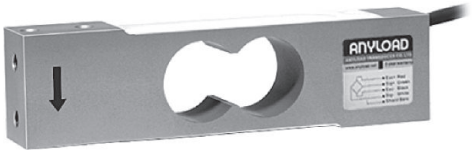

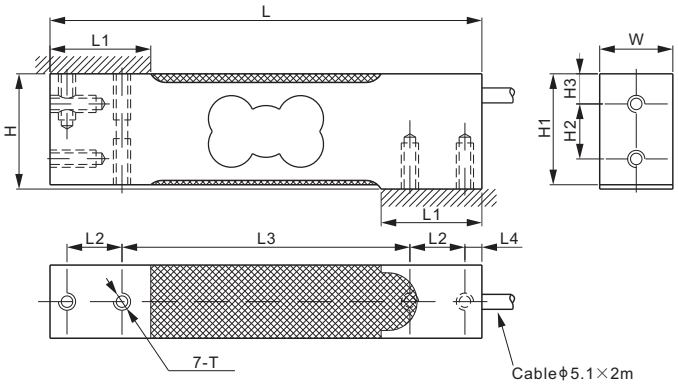

RoHS

DIMENSIONS

RATED CAPACITY	H	H1	H2	H3	L	L1	L2	L3	L4	W	T
108TA, 108TA-A1, 108TA-A2: kg/mm											
3–200	40.0	38.5	19.1	10.5	150.0	35.0	19.1	100.0	5.9	25.4	M6 Depth16
lb/inches (conversion of above dimensions)											
6.61–440.92	1.57	1.52	0.75	0.41	5.91	1.38	0.75	3.94	0.23	1.00	M6 Depth0.6
108TAUN, 108TAUN-A1, 108TAUN-A2: kg/mm											
3–200	40.0	38.5	19.1	10.5	150.0	35.0	19.1	100.0	5.9	25.4	1/4–20UNC–2B Depth16
lb/inches (conversion of above dimensions)											
6.61–440.92	1.57	1.52	0.75	0.41	5.91	1.38	0.75	3.94	0.23	1.00	1/4–20UNC–2B Depth0.6

SPECIFICATIONS

Maximum Capacity (Emax)	kg	3-200	5-200	5-200
Accuracy class according to NTEP Class III S		1:3000	1:4000	1:5000
Maximum number or verification interval (nmax)		3000	4000	5000
Y		12300		
Temperature effect on zero balance	%*Cn/K	±0.00114		
Temperature effect on sensitivity	%*Cn/K	±0.0012	±0.000875	±0.0007
Non-linearity	%*Cn	±0.017	±0.010	±0.0075
Hysteresis Error	%*Cn	±0.017	±0.012	±0.010
Creep error (30min)/DR	%*Cn	±0.017	±0.012	±0.010
Full Scale Output (Cn)	mV/V	2±10%		
Zero Balance	mV/V	±0.02		
Recommended voltage	V	10 (15 Maximum)		
Input Resistance	Ω	415±15		
Output Resistance	Ω	350±3		
insulation resistance [50V DC]	GΩ	>2		
Safe overload [Elim]	%*Emax	150		
Breaking overload	%*Emax	300		
Safe side load	%*Emax	100		
Nominal temperture range	°C / °F	-10 to 50 / 14 to 122		
Element Material		Aluminum, Clear Anodized		
Seal type / IP rating		Environmentally Sealed / IP66		
Cable color code		Exc+ Red Exc- Black Sig+ Green Sig- White		

www.anyload.com
© 2024 ANYLOAD V2 dimensions and specifications subject to change without notice

PART NUMBER*

Metric thread, 1:3000 accuracy

Rated Capacity	Part No.	Weight Approx. (kg)
3kg	108TA-3kg	0.4
5kg	108TA-5kg	0.4
7kg	108TA-7kg	0.4
10kg	108TA-10kg	0.4
15kg	108TA-15kg	0.4
20kg	108TA-20kg	0.4
30kg	108TA-30kg	0.4
50kg	108TA-50kg	0.4
75kg	108TA-75kg	0.4
100kg	108TA-100kg	0.4
150kg	108TA-150kg	0.4
200kg	108TA-200kg	0.4

Metric thread, 1:4000 accuracy

Rated Capacity	Part No.	Weight Approx. (kg)
5kg	108TA-5kg-A1	0.4
7kg	108TA-7kg-A1	0.4
10kg	108TA-10kg-A1	0.4
15kg	108TA-15kg-A1	0.4
20kg	108TA-20kg-A1	0.4
30kg	108TA-30kg-A1	0.4
50kg	108TA-50kg-A1	0.4
75kg	108TA-75kg-A1	0.4
100kg	108TA-100kg-A1	0.4
150kg	108TA-150kg-A1	0.4
200kg	108TA-200kg-A1	0.4

Metric thread, 1:5000 accuracy

Rated Capacity	Part No.	Weight Approx. (kg)
5kg	108TA-5kg-A2	0.4
7kg	108TA-7kg-A2	0.4
10kg	108TA-10kg-A2	0.4
15kg	108TA-15kg-A2	0.4
20kg	108TA-20kg-A2	0.4
30kg	108TA-30kg-A2	0.4
50kg	108TA-50kg-A2	0.4
75kg	108TA-75kg-A2	0.4
100kg	108TA-100kg-A2	0.4
150kg	108TA-150kg-A2	0.4
200kg	108TA-200kg-A2	0.4

* ATEX, FM, IECEx approved versions carry the “-Ex” suffix.

INTERCHANGEABLE PRODUCTS

Brand	Model
108TA, 108TA-A1, 108TA-A2	
Flintec	PC42 (20-150kg)*
Vishay Revere Transducers	642C
Vishay Tedea-Huntleigh	1042(metric threads)

** Flintec PC42 has a M8 mounting hole*

PART NUMBER*

Imperial thread, 1:3000 accuracy

Rated Capacity	Part No.	Weight Approx. (kg)
3kg	108TAUN-3kg	0.4
5kg	108TAUN-5kg	0.4
7kg	108TAUN-7kg	0.4
10kg	108TAUN-10kg	0.4
15kg	108TAUN-15kg	0.4
20kg	108TAUN-20kg	0.4
30kg	108TAUN-30kg	0.4
50kg	108TAUN-50kg	0.4
75kg	108TAUN-75kg	0.4
100kg	108TAUN-100kg	0.4
150kg	108TAUN-150kg	0.4
200kg	108TAUN-200kg	0.4

Imperial thread, 1:4000 accuracy

Rated Capacity	Part No.	Weight Approx. (kg)
5kg	108TAUN-5kg-A1	0.4
7kg	108TAUN-7kg-A1	0.4
10kg	108TAUN-10kg-A1	0.4
15kg	108TAUN-15kg-A1	0.4
20kg	108TAUN-20kg-A1	0.4
30kg	108TAUN-30kg-A1	0.4
50kg	108TAUN-50kg-A1	0.4
75kg	108TAUN-75kg-A1	0.4
100kg	108TAUN-100kg-A1	0.4
150kg	108TAUN-150kg-A1	0.4
200kg	108TAUN-200kg-A1	0.4

Imperial thread, 1:5000 accuracy

Rated Capacity	Part No.	Weight Approx. (kg)
5kg	108TAUN-5kg-A2	0.4
7kg	108TAUN-7kg-A2	0.4
10kg	108TAUN-10kg-A2	0.4
15kg	108TAUN-15kg-A2	0.4
20kg	108TAUN-20kg-A2	0.4
30kg	108TAUN-30kg-A2	0.4
50kg	108TAUN-50kg-A2	0.4
75kg	108TAUN-75kg-A2	0.4
100kg	108TAUN-100kg-A2	0.4
150kg	108TAUN-150kg-A2	0.4
200kg	108TAUN-200kg-A2	0.4

INTERCHANGEABLE PRODUCTS

Brand	Model
108TAUN, 108TAUN-A1, 108TAUN-A2	
Cardinal	TSP
Coti Global	CG-42
HBM	SP4
Rice Lake	RL1042
Rice Lake	RLSP4
Vishay Revere Transducers	642
Vishay Tedea-Huntleigh	1042(imperial threads)

NTEP 1:5 000 Class III, Single Cell

5kg-30kg: OIML MAA C7.5, Y=20 000;
50kg-200kg: OIML MAA C6, Y=29 000

For further definition of P/N’s & specifications per NTEP/OIML classes, please contact us.

SINGLE POINTS

© 2024 ANYLOAD V2 dimensions and specifications subject to change without notice

Product Datasheet Disclaimer

All product specifications, statements, information and data (collectively, the "Information") in this catalog or made available elsewhere by ANYLOAD are subject to change. The customer is responsible for checking and verifying the extent to which the Information contained in this publication is applicable to an order at the time the order is placed. All Information given herein is believed to be accurate and reliable, but it is presented without guarantee, warranty, or responsibility of any kind, expressed or implied.

Data listed in the datasheet is produced within controlled laboratory settings and may not be reproduceable without exact replication of all conditions. It is the customer’s responsibility to validate that a particular product with the properties described in the product specifications is suitable for use in their applications. Statements of interchangeability with other manufacturers are based on ANYLOAD's knowledge of product information at the time a publication was made, but are not intended to constitute any warranty concerning the substitutability of an ANYLOAD product with one made by another manufacturer.

Any use of product outside of specifications or any storage or installation inconsistent with product guidance voids and warranty.

The information is intended for use only by customers who have the requisite experience and capability to determine the correct products for their application. Any technical advice inferred from this Information or otherwise provided by ANYLOAD with reference to the use of ANYLOAD's products produces no obligation or liability for the advice given or results obtained.

Although ANYLOAD designs and manufactures its products to the most stringent quality and safety standards, isolated component failures may still occur. Accordingly, customer applications which require a high degree of reliability or safety should employ suitable designs or other safeguards in order to ensure that the failure of an electrical component does not result in a risk of personal injury or property damage.

Unless specifically agreed to in writing, ANYLOAD has not tested or certified its products, services or deliverables for use in high risk applications including medical life support, medical device, direct physical patient contact, water treatment, nuclear facilities, weapon systems, mass and air transportation control, flammable environments, or any other potentially life critical uses. Customer understands and agrees that ANYLOAD makes no assurances that the products, services or deliverables are suitable for any high-risk uses. Under no circumstances does ANYLOAD warrant or guarantee suitability for any customer design or manufacturing process. Although all product－related warnings, cautions and notes must be observed, the customer should not assume that all safety measures are indicted or that other measures may not be required. Please contact authorized ANYLOAD personnel to obtain special terms and conditions regarding products designed for such applications or otherwise satisfy specific safety requirements.

© 2024 ANYLOAD V1 dimensions and specifications subject to change without notice