# ANYLOAD

# 266AA; 266AH

## Aluminum / Alloy Steel; Patent Design

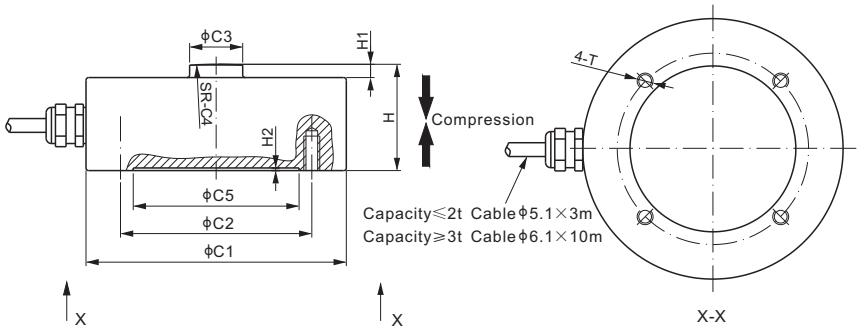


CE RoHS

Mounting hardware to be ordered separately.

### DIMENSIONS

| RATED CAPACITY | C1 | C2 | C3 | C4 | C5 | H | H1 | H2 | T |
|---|---|---|---|---|---|---|---|---|---|
| **266AA** | | | | | | | | | |
| **kg/mm** | | | | | | | | | |
| 25–50 | 62.0 | 55.0 | 12.0 | 50.0 | 36.0 | 22.0 | 4.0 | 1.0 | M5 Depth7.0 |
| **lb/inches** (conversion of above dimensions) | | | | | | | | | |
| 55.12–110.23 | 2.44 | 2.17 | 0.47 | 1.97 | 1.42 | 0.87 | 0.16 | 0.04 | M5 Depth0.28 |
| **266AH** | | | | | | | | | |
| **kg/mm** | | | | | | | | | |
| 100–2,000 | 62.0 | 55.0 | 12.0 | 50.0 | 36.0 | 22.0 | 4.0 | 1.0 | M5 Depth7.0 |
| 3,000–5,000 | 98.0 | 72.0 | 20.0 | 150.0 | 62.4 | 40.0 | 5.0 | 1.0 | M6 Depth13.0 |
| 10,000 | 98.0 | 72.0 | 20.0 | 150.0 | 62.4 | 45.0 | 5.0 | 1.0 | M6 Depth13.0 |
| 20,000 | 118.0 | 90.0 | 20.0 | 250.0 | 62.4 | 50.0 | 5.0 | 1.0 | M8 Depth15.0 |
| 30,000 | 138.0 | 115.0 | 20.0 | 250.0 | 62.4 | 73.0 | 8.0 | 1.0 | M10 Depth15.0 |
| **lb/inches** (conversion of above dimensions) | | | | | | | | | |
| 220.5–4,409.2 | 2.44 | 2.17 | 0.47 | 1.97 | 1.42 | 0.87 | 0.16 | 0.04 | M5 Depth0.28 |
| 6,613.9–11,023.1 | 3.86 | 2.83 | 0.79 | 5.91 | 2.46 | 1.57 | 0.20 | 0.04 | M6 Depth 0.51 |
| 22,046.2 | 3.86 | 2.83 | 0.79 | 5.91 | 2.46 | 1.77 | 0.20 | 0.04 | M6 Depth0.51 |
| 44,092.5 | 4.65 | 3.54 | 0.79 | 9.84 | 2.46 | 1.97 | 0.20 | 0.04 | M8 Depth0.59 |
| 66,138.7 | 5.43 | 4.53 | 0.79 | 9.84 | 2.46 | 2.87 | 0.31 | 0.04 | M10 Depth0.59 |

### SPECIFICATIONS

| | | | |
|---|---|---|---|
| **Full Scale Output** | 2.0 mV/V ± 1% | **Recommended Excitation** | 10V (15V Maximum) |
| **Zero Balance** | < ± 0.04 mV/V | **Insulation Resistance** | >2 [ 50V DC ] GΩ |
| **Non-linearity** | Cap.≤2t: < ± 0.2%; Cap.≥3t: < ± 0.05% | **Compensated Temperature Range** | -10°C to 50°C / 14°F to 122°F |
| **Repeatability** | Cap.≤2t: < ± 0.03%; Cap.≥3t: < ± 0.03% | **Safe Overload** | 150% of full scale |
| **Hysteresis Error** | Cap.≤2t: < ± 0.1%; Cap.≥3t: < ± 0.05% | **Breaking Overload** | 300% of full scale |
| **Creep in 30 min.** | Cap.≤2t: < ± 0.1%; Cap.≥3t: < ± 0.05% | **Seal Type / IP Rating** | 266AA: Environmentally Sealed / IP66 |
| **Input Resistance** | Cap.≤2t: 400Ω ± 20; Cap.≥3t: 770Ω ± 30 | | 266AH: Welded Seal / IP67 |
| **Output Resistance** | Cap.≤2t: 350Ω ± 3; Cap.≥3t: 700Ω ± 5 | **Cable Color Code** | Exc+ Red Exc- Black |
| **Element Material** | Aluminum / Alloy Steel, Nickel Plated | | Sig+ Green Sig- White Shield Bare |

### PART NUMBER

| Rated Capacity | Part No. | Weight (kg) Approx. |
|---|---|---|
| 25kg | 266AA-25kg | 0.3 |
| 50kg | 266AA-50kg | 0.3 |
| 100kg | 266AH-100kg | 0.5 |
| 200kg | 266AH-200kg | 0.5 |
| 300kg | 266AH-300kg | 0.5 |
| 500kg | 266AH-500kg | 0.5 |
| 1t | 266AH-1t | 0.5 |
| 2t | 266AH-2t | 0.5 |
| 3t | 266AH-3t | 2.4 |
| 5t | 266AH-5t | 2.4 |
| 10t | 266AH-10t | 2.4 |
| 20t | 266AH-20t | 4.2 |
| 30t | 266AH-30t | 8.3 |




© 2021 ANYLOAD V3 dimensions and specifications subject to change without notice

## Mounting Variation 1, Alloy Steel
## F266-1

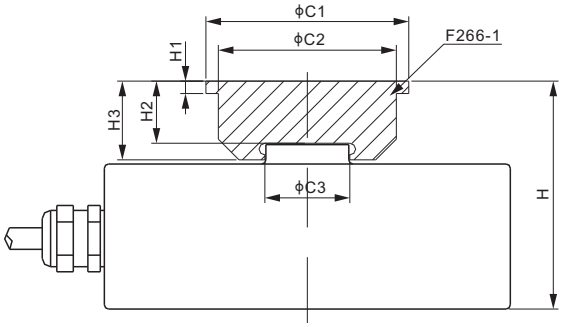


| PART NUMBER | LOAD CELL CAPACITY | DIMENSIONS C1 | C2 | C3 | H | H1 | H2 | H3 | Weight (kg) Approx. |
|---|---|---|---|---|---|---|---|---|---|
| | **kg/mm** | | | | | | | | |
| F266-1B | 25-2,000 | 41.0 | 35.0 | 13.8 | 35.1 | 3.0 | 13.1 | 16.0 | 0.12 |
| F266-1C | 3,000-5,000 | 49.0 | 43.0 | 20.5 | 55.1 | 3.0 | 15.1 | 19.0 | 0.20 |
| F266-1C | 10,000 | 49.0 | 43.0 | 20.5 | 60.1 | 3.0 | 15.1 | 19.0 | 0.20 |
| F266-1D | 20,000 | 60.0 | 54.0 | 21.0 | 70.1 | 3.0 | 20.1 | 24.0 | 0.41 |
| F266-1D | 30,000 | 60.0 | 54.0 | 20.5 | 93.1 | 3.0 | 20.1 | 24.0 | 0.41 |
| | **lb/inches** (conversion of above dimensions) | | | | | | | | |
| F266-1B | 55.1-4,409.2 | 1.61 | 1.38 | 0.54 | 1.38 | 0.12 | 0.52 | 0.63 | 0.12 |
| F266-1C | 6,613.9-11,023.1 | 1.93 | 1.69 | 0.81 | 2.17 | 0.12 | 0.59 | 0.75 | 0.20 |
| F266-1C | 22,046.2 | 1.93 | 1.69 | 0.81 | 2.37 | 0.12 | 0.59 | 0.75 | 0.20 |
| F266-1D | 44,092.5 | 2.36 | 2.13 | 0.83 | 2.76 | 0.12 | 0.79 | 0.95 | 0.41 |
| F266-1D | 66,138.7 | 2.36 | 2.13 | 0.81 | 3.67 | 0.12 | 0.79 | 0.95 | 0.41 |

## Mounting Variation 2
## F266-1 + F266-2 + ZPS

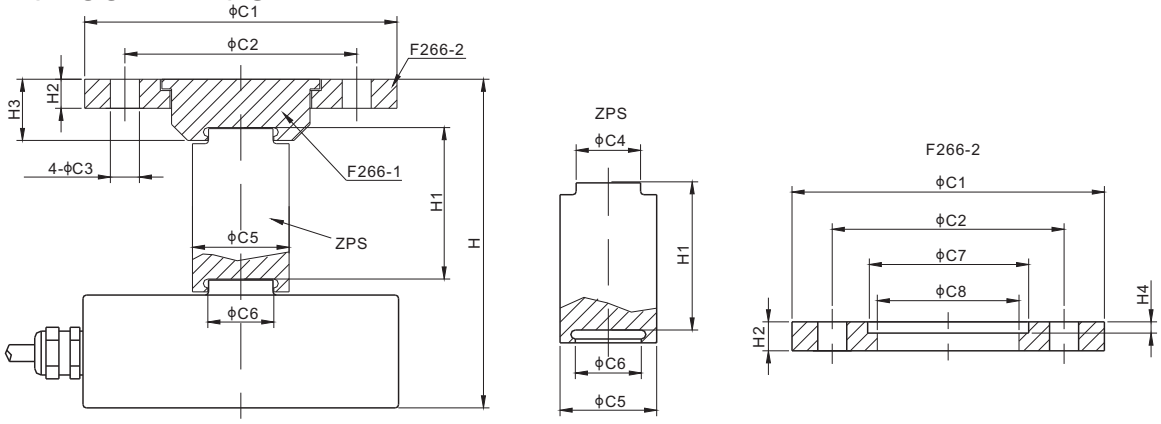


| LOAD CELL CAPACITY | DIMENSIONS C1 | C2 | C3 | C4 | C5 | C6 | C7 | C8 | H | H1 | H2 | H3 | H4 |
|---|---|---|---|---|---|---|---|---|---|---|---|---|---|
| **kg/mm** | | | | | | | | | | | | | |
| 25-2,000 | 81.0 | 60.0 | 9.0 | 13.0 | 26.0 | 12.5 | 42.0 | 36.0 | 81.1 | 46.0 | 7.0 | 16.0 | 3.5 |
| 3,000-5,000 | 97.0 | 72.0 | 11.0 | 20.0 | 32.0 | 20.5 | 50.0 | 44.0 | 111.1 | 56.0 | 9.0 | 19.0 | 3.5 |
| 10,000 | 97.0 | 72.0 | 11.0 | 20.0 | 32.0 | 20.5 | 50.0 | 44.0 | 116.1 | 56.0 | 9.0 | 19.0 | 3.5 |
| 20,000 | 115.0 | 90.0 | 13.0 | 20.0 | 36.0 | 20.5 | 61.0 | 55.0 | 134.6 | 64.5 | 10.0 | 24.0 | 3.5 |
| 30,000 | 115.0 | 90.0 | 13.0 | 20.0 | 36.0 | 20.5 | 61.0 | 55.0 | 157.6 | 64.5 | 10.0 | 24.0 | 3.5 |
| **lb/inches** (conversion of above dimensions) | | | | | | | | | | | | | |
| 55.1-4,409.2 | 3.19 | 2.36 | 0.35 | 0.51 | 1.02 | 0.49 | 1.65 | 1.42 | 3.19 | 1.81 | 0.28 | 0.63 | 0.14 |
| 6,613.9-11,023.1 | 3.82 | 2.83 | 0.43 | 0.79 | 1.26 | 0.81 | 1.97 | 1.73 | 4.37 | 2.20 | 0.35 | 0.75 | 0.14 |
| 22,046.2 | 3.82 | 2.83 | 0.43 | 0.79 | 1.26 | 0.81 | 1.97 | 1.73 | 4.57 | 2.20 | 0.35 | 0.75 | 0.14 |
| 44,092.5 | 4.53 | 3.54 | 0.51 | 0.79 | 1.42 | 0.81 | 2.40 | 2.17 | 5.30 | 2.54 | 0.39 | 0.95 | 0.14 |
| 66,138.7 | 4.53 | 3.54 | 0.51 | 0.79 | 1.42 | 0.81 | 2.40 | 2.17 | 6.21 | 2.54 | 0.39 | 0.95 | 0.14 |

### PART NUMBER

| Load Cell Capacity | F266-1 Part No. | F266-2 Part No. | ZPS Part No. |
|---|---|---|---|
| 25kg-2t | F266-1B | F266-2B | ZPS-B |
| 3t; 5t; 10t | F266-1C | F266-2C | ZPS-C |
| 20t; 30t | F266-1D | F266-2D | ZPS-D |







© 2021 ANYLOAD V3 dimensions and specifications subject to change without notice

# 266AA; 266AH

## Mounting Variation 3
## F266-1 + F266-2 + FEB

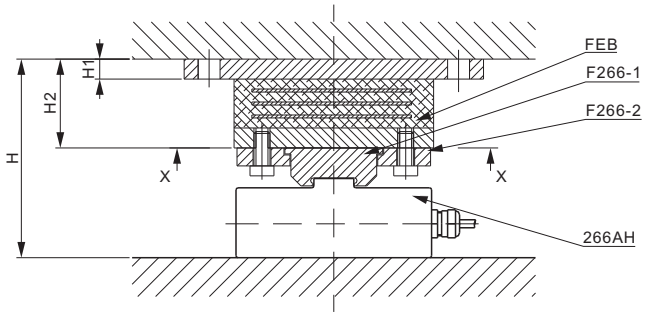


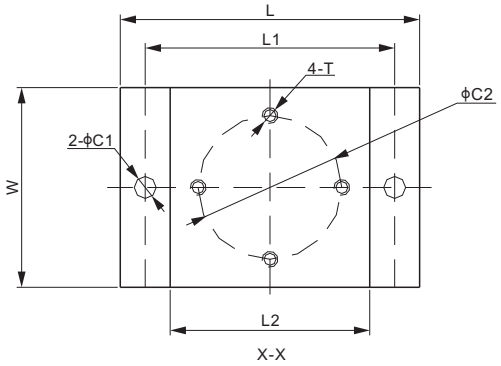


### DIMENSIONS

| LOAD CELL CAPACITY | C1 | C2 | H | H1 | H2 | L | L1 | L2 | W | T |
|---|---|---|---|---|---|---|---|---|---|---|
| **kg/mm** | | | | | | | | | | |
| 25–2,000 | 9.0 | 60.0 | 81.1 | 8.0 | 46.0 | 150.0 | 125.0 | 100.0 | 90.0 | M8 |
| 3,000–5,000 | 11.0 | 72.0 | 99.6 | 10.0 | 44.5 | 180.0 | 150.0 | 120.0 | 120.0 | M10 |
| 10,000 | 11.0 | 72.0 | 104.6 | 10.0 | 44.5 | 180.0 | 150.0 | 120.0 | 120.0 | M10 |
| 20,000 | 13.0 | 90.0 | 120.1 | 12.0 | 50.0 | 270.0 | 240.0 | 200.0 | 200.0 | M12 |
| 30,000 | 13.0 | 90.0 | 143.1 | 12.0 | 50.0 | 270.0 | 240.0 | 200.0 | 200.0 | M12 |
| **lb/inches** (conversion of above dimensions) | | | | | | | | | | |
| 55.1–4,409.2 | 0.35 | 2.36 | 3.19 | 0.31 | 1.81 | 5.91 | 4.93 | 3.94 | 3.55 | M8 |
| 6,613.9–11,023.1 | 0.43 | 2.84 | 3.92 | 0.39 | 1.75 | 7.09 | 5.91 | 4.73 | 4.73 | M10 |
| 22,046.2 | 0.43 | 2.84 | 4.12 | 0.39 | 1.75 | 7.09 | 5.91 | 4.73 | 4.73 | M10 |
| 44,092.5 | 0.51 | 3.55 | 4.73 | 0.47 | 1.97 | 10.64 | 9.46 | 7.88 | 7.88 | M12 |
| 66,138.7 | 0.51 | 3.55 | 5.64 | 0.47 | 1.97 | 10.64 | 9.46 | 7.88 | 7.88 | M12 |

### PART NUMBER

| Load Cell Capacity | F266-1* Part No. | F266-2* Part No. |
|---|---|---|
| 25kg-2t | F266-1B | F266-2B |
| 3t; 5t; 10t | F266-1C | F266-2C |
| 20t; 30t | F266-1D | F266-2D |

** Neither F266-1 nor F266-2 includes the bolts, the bolts need to be ordered separately. FEB includes 4 bolts that match the hole size (T on the drawing).*

### PART NUMBER

| Load Cell Capacity | FEB * Part No. | Weight (kg) Approx. |
|---|---|---|
| 25kg-2t | FEB-B | 2.3 |
| 3t; 5t; 10t | FEB-C | - |
| 20t; 30t | FEB-D | - |




© 2021 ANYLOAD V3 dimensions and specifications subject to change without notice