Bench Scale, 304 Stainless Steel

Measurement Canada

Indicator to be ordered separately.

Features:

- Heavy gage stainless steel pan
- Heavy gage stainless steel construction
- Level bubble
- Bracket, column and column holder included
- Overload capacity: 150% FS

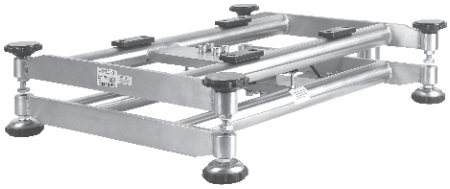

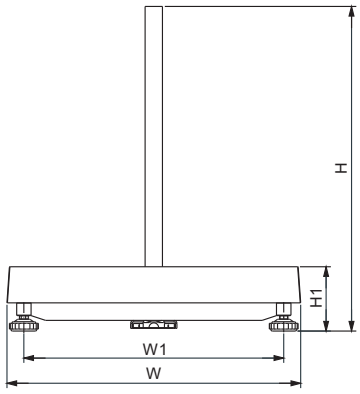

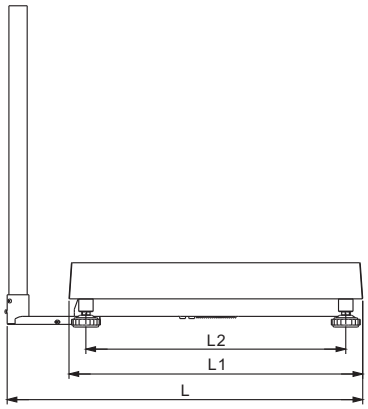

PART NUMBER	RATED CAPACITY	DIVISION	LOAD CELL CAPACITY	PLATFORM SIZE (inch/cm)	COLUMN LENGTH (inch/cm)	GROSS WEIGHT(kg/lb)
TNS3030-15kg	15kg	5g	108JA-20kg	11.8×11.8 / 30×30	15.75 / 40	10.9/24.0
TNS3030-30kg	30kg	10g	108JA-50kg	11.8×11.8 / 30×30	15.75 / 40	10.9/24.0
TNS3030-60kg	60kg	20g	108JA-75kg	11.8×11.8 / 30×30	15.75 / 40	10.9/24.0
TNS4050-60kg	60kg	20g	108JA-75kg	15.8×19.7 / 40×50	26 / 66	18.9/41.7
TNS4050-60kg-LE	60kg	20g	108JA-LE75kg	15.8×19.7 / 40×50	26 / 66	18.9/41.7
TNS4050-150kg-SE	150kg	50g	108JA-SE200kg	15.8×19.7 / 40×50	26 / 66	18.9/41.7
TNS4050-300kg-SE	300kg	100g	108JA-SE400kg	15.8×19.7 / 40×50	26 / 66	18.9/41.7
TNS4646-60kg	60kg	20g	108JA-75kg	18.1×18.1 / 46×46	26 / 66	24.6/54.2
TNS4646-60kg-LE	60kg	20g	108JA-LE75kg	18.1×18.1 / 46×46	26 / 66	24.6/54.2
TNS4646-150kg-SE	150kg	50g	108JA-SE200kg	18.1×18.1 / 46×46	26 / 66	24.6/54.2
TNS4646-300kg-SE	300kg	100g	108JA-SE400kg	18.1×18.1 / 46×46	26 / 66	24.6/54.2
TNS4660-60kg	60kg	20g	108JA-75kg	18.1×23.6 / 46×60	26 / 66	25.2/55.6
TNS4660-60kg-LE	60kg	20g	108JA-LE75kg	18.1×23.6 / 46×60	26 / 66	25.2/55.6
TNS4660-150kg-SE	150kg	50g	108JA-SE200kg	18.1×23.6 / 46×60	26 / 66	25.2/55.6
TNS4660-300kg-SE	300kg	100g	108JA-SE400kg	18.1×23.6 / 46×60	26 / 66	25.2/55.6
TNS6060-150kg-SE	150kg	50g	108JA-SE200kg	23.6×23.6 / 60×60	26 / 66	31.4/69.2
TNS6060-300kg-SE	300kg	100g	108JA-SE400kg	23.6×23.6 / 60×60	26 / 66	31.4/69.2

DIMENSIONS(mm)

PART NUMBER	L	L1	L2	H	H1	W	W1
TNS3030-15kg	439	310	240	407	112	310	240
TNS3030-30kg	439	310	240	407	112	310	240
TNS3030-60kg	439	310	240	407	112	310	240
TNS4050-60kg	639	510	440	665	110	410	340
TNS4050-60kg-LE	639	510	440	665	110	410	340
TNS4050-150kg-SE	639	510	440	665	110	410	340
TNS4050-300kg-SE	639	510	440	665	110	410	340
TNS4646-60kg	599	470	400	667	112	470	400
TNS4646-60kg-LE	599	470	400	667	112	470	400
TNS4646-150kg-SE	599	470	400	667	112	470	400
TNS4646-300kg-SE	599	470	400	667	112	470	400
TNS4660-60kg	739	610	540	686	140	470	400
TNS4660-60kg-LE	739	610	540	686	140	470	400
TNS4660-150kg-SE	739	610	540	686	140	470	400
TNS4660-300kg-SE	739	610	540	686	140	470	400
TNS6060-150kg-SE	739	610	540	667	134	610	540
TNS6060-300kg-SE	739	610	540	667	134	610	540

OPTIONAL ACCESSORIES

■ Indicators (page 161/162)

© 2021 ANYLOAD V3 dimensions and specifications subject to change without notice