363HHAN

Alloy Steel

CE RoHS

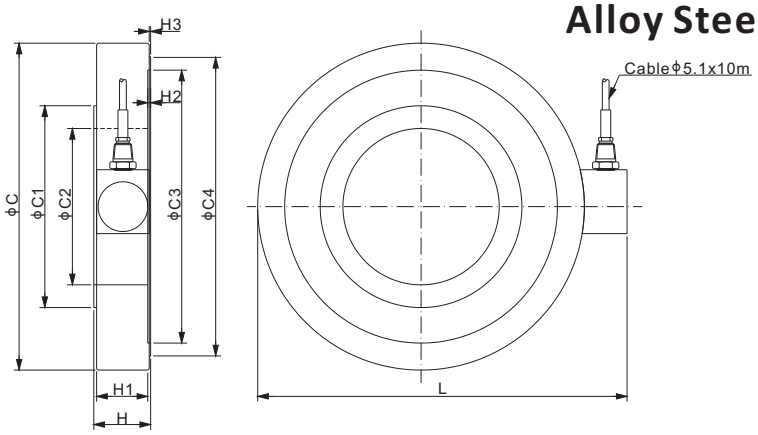

DIMENSIONS

RATED CAPACITY	C	C1	C2	C3	C4	H	H1	H2	H3	L
t/mm										
60	230	142	110	192	210	40.0	38.0	2.0	1.0	260
Klb/inches (conversion of above dimensions)										
132.28	9.06	5.59	4.33	7.56	8.27	1.58	1.50	0.08	0.04	10.24

SPECIFICATIONS

Full Scale Output	2.0 mV/V ± 0.25%	**Recommended Excitation**	10V (15V Maximum)
Zero Balance	± 0.02 mV/V	**Insulation Resistance**	>2 [50V DC] GΩ
Non-linearity	< ± 0.8%	**Compensated Temperature Range**	-10°C to 50°C / 14°F to 122°F
Repeatability	< ± 0.03%	**Safe Overload**	150% of full scale
Hysteresis Error	< ± 0.9%	**Breaking Overload**	300% of full scale
Creep in 30 min.	< ± 0.1%	**Seal Type / IP Rating**	Welded Seal / IP67
Input Resistance	770Ω ± 30	**Cable Color Code**	Exc+ Red Exc- Black
Output Resistance	700Ω ± 5		Sig+ Green Sig- White
Element Material	Alloy Steel		Shield Bare

PART NUMBER

Rated Capacity	Part No.	Weight (kg) Approx.
60t	363HHAN-60t-10m	9.6

AVAILABLE OPTION

■ Stainless steel element: 363HSAN

APPLICATION EXAMPLES

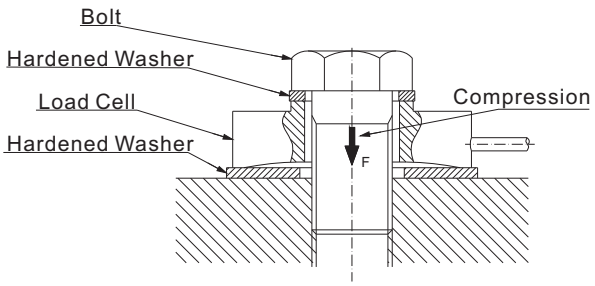

CANISTERS & DISKS

© 2021 ANYLOAD V4 dimensions and specifications subject to change without notice