101AALS; 101ASLS

Aluminum/Stainless Steel

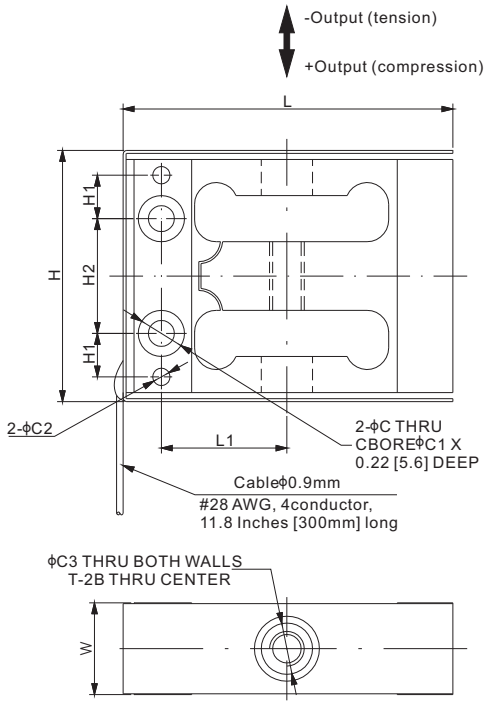

FORCE MEASUREMENT LOAD CELL

DIMENSIONS

RATED CAPACITY	C	C1	C2	C3	H	H1	H2	L	L1	T	W
lb/inches											
2.2–100	0.14	0.25	–	0.28	1.37	–	0.63	1.80	0.69	#10–32 UNF	0.50
200	0.14	0.25	0.09	0.28	1.37	0.22	0.63	1.80	0.69	#10–32 UNF	0.50
300–500	0.21	0.34	0.09	0.28	1.37	0.24	0.63	1.80	0.69	1/4–28 UNF	0.50
kg/mm (conversion of above dimensions)											
1.00–45.36	3.6	6.4	–	7.1	34.8	–	15.9	45.7	17.4	#10–32 UNF	12.7
90.72	3.6	6.4	2.4	7.1	34.8	5.5	15.9	45.7	17.4	#10–32 UNF	12.7
136.08–226.80	5.4	8.6	2.4	7.1	34.8	6.0	15.9	45.7	17.4	1/4–28 UNF	12.7

SPECIFICATIONS

Full Scale Output	2.0 mV/V ± 20%	**Element Material**	Aluminum (2.2-100lb) 17-4PH stainless steel (200-500lb)
Zero Balance	± 0.02 mV/V		
Non-linearity	< ± 0.02% (2.2-100lb) < ± 0.06% (200-500lb)	**Recommended Excitation**	10V (15V Maximum)
		Insulation Resistance	>0.5 [50V DC] GΩ
Repeatability	< ± 0.02%	**Nominal Temperature Range**	-10°C to 40°C / 14°F to 104°F(Aluminum) -10°C to 50°C / 14°F to 122°F (17-4PH stainless steel)
Hysteresis Error	< ± 0.02% (2.2-100lb) < ± 0.06% (200-500lb)		
Creep in 30 min.	< ± 0.025%	**Seal Type / IP Rating**	IP30
Input Resistance	1050Ω ± 15	**Cable Color Code**	Exc+ Green Exc- Black Sig+ White Sig- Red
Output Resistance	1000Ω ± 3		

PART NUMBER*

Rated Capacity	Safe Overload(lb)	Part No.	Weight (kg) Approx.
2.2lb	100	101AALS-2.2lb	0.1
5lb	100	101AALS-5lb	0.1
10lb	100	101AALS-10lb	0.1
25lb	150	101AALS-25lb	0.1
50lb	150	101AALS-50lb	0.1
100lb	300	101AALS-100lb	0.1
200lb	400	101ASLS-200lb	0.25
300lb	600	101ASLS-300lb	0.25
500lb	750	101ASLS-500lb	0.25

* ATEX, FM, IECEx approved versions carry the "-Ex" suffix.

© 2023 ANYLOAD V1 dimensions and specifications subject to change without notice