106TS

Stainless Steel



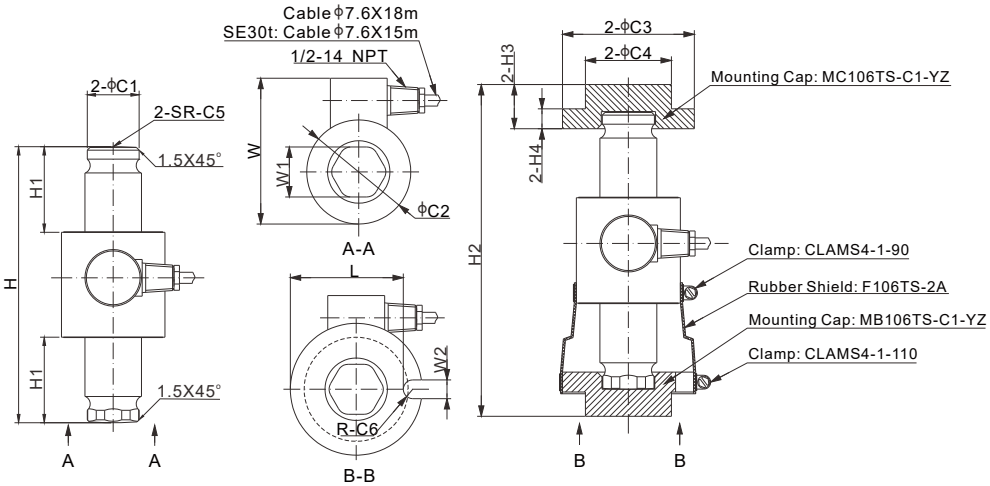

Installation diagram:

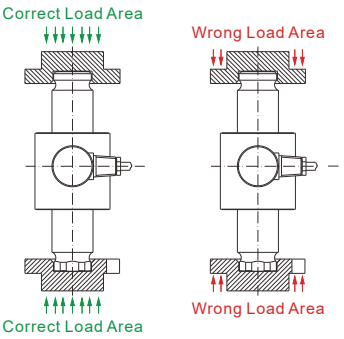

RoHS

Mounting hardware to be ordered separately.

DIMENSIONS

RATED CAPACITY	C1	C2	C3	C4	C5	C6	H	H1	H2	H3	H4	L	W	W1	W2
Klb/inches															
50–100	1.48	2.95	3.74	2.44	11.02	0.27	7.88	2.43	9.41	1.25	0.56	3.21	4.13	1.41	0.53
t/mm															
30	37.7	75.0	95.0	62.0	280.0	6.75	200.0	61.7	239.0	31.8	14.3	81.5	105.0	35.7	13.5
SE30	37.7	75.0	95.0	62.0	160.0	6.75	150.0	37.0	189.0	31.8	14.3	81.5	105.0	35.7	13.5
SE50	37.7	75.0	95.0	62.0	305.0	6.75	150.0	37.0	189.0	31.8	14.3	81.5	105.0	35.7	13.5

SPECIFICATIONS

Full Scale Output	2.0 mV/V ± 0.1%	**Recommended Excitation**	10V (15V Maximum)
Zero Balance	± 0.02 mV/V	**Insulation Resistance**	>2[50V DC] GΩ
Non-linearity	< ± 0.030%	**Compensated Temperature Range**	-10°C to 50°C / 14°F to 122°F
Repeatability	< ± 0.017%	**Safe Overload**	150% of full scale
Hysteresis Error	< ± 0.017%	**Breaking Overload**	300% of full scale
Creep in 30 min.	< ± 0.020%	**Seal Type / IP Rating**	Welded Seal / IP68
Input Resistance	1150 Ω ± 50	**Cable Color Code**	Exc+ Red Exc- Black
Output Resistance	1000 Ω ± 3		Sig+ Green Sig- White
Element Material	2Cr13 Stainless Steel		Shield Bare

PART NUMBER*

Load Cell

Rated Capacity	Part No.	Weight Approx. (kg)
50Klb	106TS-50Klb-YZ	4.2
100Klb	106TS-100Klb-YZ	4.4
30t	106TS-30t-YZ	5.8
SE30t	106TS-SE30t-YZ	3.7
SE50t	106TS-SE50t-YZ	3.5

* ATEX, FM, IECEx approved versions carry the "-Ex" suffix.

Mounting Kits**

Load Cell Capacity	Part No.	Weight Approx. (kg)
SE30t, SE50t, 30t, 50Klb, 100Klb	106TS-PARTS-C1	-

**Mounting kits 106TS-PARTS-C1: include
1 mounting cap (MC106TS-C1-YZ), 1 x mounting base (MB106TS-C1-YZ),
1 x rubber shield (F106TS-2A), 2 clamps (1 x CLAMS4-1-90, 1 x CLAMS4-1-110)

Rated Capacity	Part Number	INTERCHANGEABLE REFERENCE	
		Coti-Global	Mettler-Toledo
50Klb****	106TS-50Klb-YZ		Powercell 760/MTX***
100Klb	106TS-100Klb-YZ		Powercell 760/MTX***
30t****	106TS-30t-YZ	CG-26S7-30t-797	Powercell 760/MTX***
SE30t	106TS-SE30t-YZ	CG-26S7-30t	0782, 30t
SE50t	106TS-SE50t-YZ	CG-26S7-50t	0782, 50t

*** *Powercell 760 and MTX are digital load cells.*

**** *30t and 50Klb models are interchangeable only with their respective capacity variants and are not interchangeable with each other.*

NTEP 1:10 000 Class IIIL, Multiple Cell

OIML MAA C3, Y=16 000

For further available P/N's & specifications per NTEP/OIML classes, please contact us.

CANISTERS & DISKS

© 2026 ANYLOAD V3 • dimensions and specifications subject to change without notice

For applications that need to replace Mettler Toledo Powercell PDX (SLC820) 30t or 50t, you have options too: Order mounting variation A or B with 106TS-SE30t-YZ or 106TS-SE50t-YZ.

Mounting variation A:

Mounting Cap: MC106TS-A1-YZ

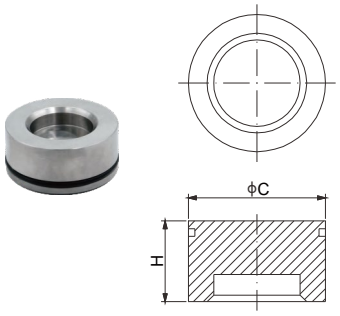

Mounting Base: MB106TS-A1-YZ

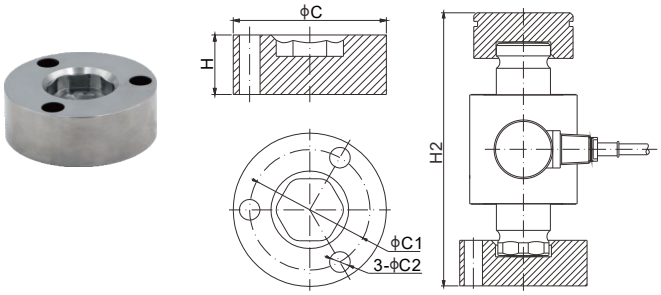

Rubber shield:
F106TS-2B

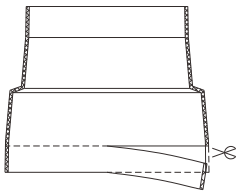

1/2 inch shorter than F106TS-2A

DIMENSIONS

PART NUMBER	RATED CAPACITY	C	C1	C2	H	H1	H2	L	W
	t/mm								
MC106TS-A1-YZ	30	69.3	–	–	31.8	–	190.6	–	–
MB106TS-A1-YZ	30	88.9	69.9	12.7	31.8	–	190.6	–	–
	Klb/inches(conversion of above dimensions)								
MC106TS-A1-YZ	66.14	2.73	–	–	1.25	–	7.5	–	–
MB106TS-A1-YZ	66.14	3.50	2.75	0.50	1.25	–	7.5	–	–

Mounting kits:
106TS-PARTS-A1:
Include 1 x mounting cap (MC106TS-A1-YZ), 1 x mounting base (MB106TS-A1-YZ), 1 x rubber shield (F106TS-2B), 2 x clamps (1 x CLAMS4-1-90, 1 x CLAMS4-1-110)

Mounting variation B:

Mounting Cap: MC106TS-B1-YZ

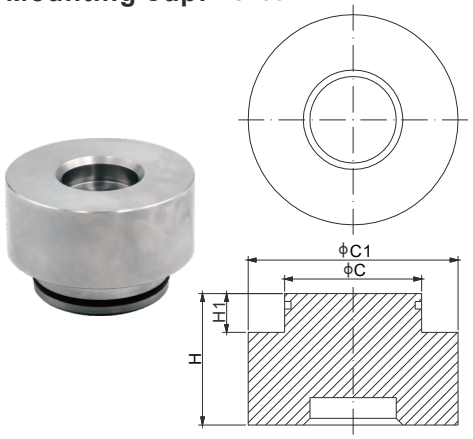

Mounting Base: MB106TS-B1-YZ

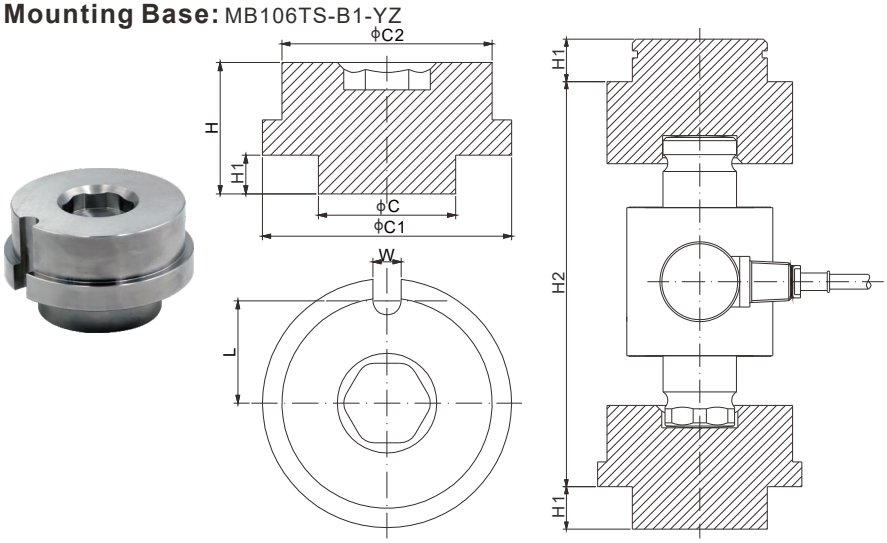

DIMENSIONS

PART NUMBER	RATED CAPACITY	C	C1	C2	H	H1	H2	L	W
	t/mm								
MC106TS-B1-YZ	30	69.3	95.3	–	63.5	21.8	207.9	–	–
MB106TS-B1-YZ	30	69.3	104.9	95.3	63.5	21.8	207.9	46.2	12.7
	Klb/inches(conversion of above dimensions)								
MC106TS-B1-YZ	66.14	2.73	3.75	–	2.50	0.86	8.19	–	–
MB106TS-B1-YZ	66.14	2.73	4.13	3.75	2.50	0.86	8.19	1.82	0.50

Mounting kits:
106TS-PARTS-B1:
Include 1 x mounting cap (MC106TS-B1-YZ), 1 x mounting base (MB106TS-B1-YZ), 1 x rubber shield (F106TS-2B), 2 x clamps (1 x CLAMS4-1-90, 1 x CLAMS4-1-110)

© 2026 ANYLOAD V3 • dimensions and specifications subject to change without notice

Product Datasheet Disclaimer

Information Changes:
All product specifications, statements, information, and data (collectively, the "Information") in this catalog or made available elsewhere by ANYLOAD are subject to change. Customers must verify the applicability of the Information at the time of order placement.

Accuracy and Reliability:
While all Information is believed to be accurate and reliable, it is presented without guarantee, warranty, or responsibility of any kind, expressed or implied.

Laboratory Conditions:
Data listed in the datasheet is produced within controlled laboratory settings and may not be reproducible without exact replication of all metrological conditions. Users must validate that a product with the described properties is suitable for their applications.

Interchangeability:
Statements of interchangeability with other manufacturers are based on ANYLOAD's knowledge at the time of publication and are not intended to constitute any warranty concerning the substitutability of an ANYLOAD product with one made by another Manufacturer.

Warranty Voidance:
Any use of the product outside of specifications or any storage or installation inconsistent with product guidance voids any warranty.

Intended Use:
The information is intended for use only by customers who have the requisite experience and capability to determine the correct products for their application. ANYLOAD provides technical advice without obligation or liability for the advice given or results obtained.

Component Failures:
Although ANYLOAD designs and manufactures its products to stringent quality and safety standards, isolated component failures may still occur. Applications requiring high reliability or safety should employ suitable designs or safeguards to ensure that component failure does not result in personal injury or property damage.

High-Risk Applications:
Unless specifically agreed to in writing, ANYLOAD has not tested or certified its products, services, or deliverables for use in high-risk applications (e.g., medical life support, nuclear facilities, weapon systems). ANYLOAD makes no assurances that the products are suitable for high-risk uses. Under no circumstances does ANYLOAD warrant or guarantee suitability for any customer design or manufacturing process.

Contact authorized ANYLOAD personnel for special terms and conditions regarding products designed for specific safety requirements.

Safety Measures:
All product-related warnings, cautions, and notes must be observed. Customers should not assume that all safety measures are indicated or that other measures may not be required.

California Proposition 65:

⚠ **WARNING:** Some products manufactured or distributed by ANYLOAD may contain trace amounts of chemicals known to the State of California to cause cancer, birth defects, or other reproductive harm. These substances are present in minimal quantities and are typically encapsulated within our products. This warning is provided to enable you to make informed decisions as a consumer.

© 2026 ANYLOAD V1 • dimensions and specifications subject to change without notice