106RS

Stainless Steel



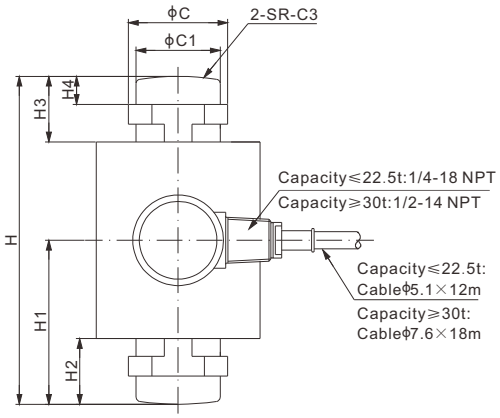

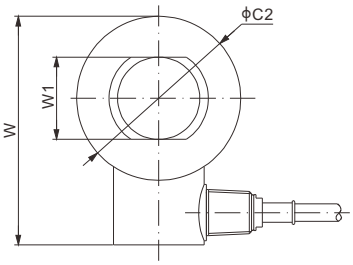

RoHS

Mounting hardware to be ordered separately.

DIMENSIONS

RATED CAPACITY	C	C1	C2	C3	H	H1	H2	H3	H4	W	W1
t/mm											
7.5–22.5	34.0	28.0	65.0	100.0	89.0	44.5	19.7	19.7	11.0	95.3	28.0
30	45.8	39.0	75.0	120.0	140.0	75.0	32.0	32.0	13.0	105.3	39.0
40	45.8	39.0	75.0	180.0	150.0	80.0	37.0	37.0	13.0	106.0	39.0
50	56.5	44.0	99.0	280.0	178.0	94.0	34.0	34.0	17.0	129.0	44.0
100	70.0	62.0	99.0	380.0	200.0	100.0	34.0	34.0	17.0	129.0	62.0
lb/inches (conversion of above dimensions)											
16,534.7–49,604.0	1.34	1.10	2.56	3.94	3.50	1.75	0.78	0.78	0.43	3.75	1.10
66,138.7	1.80	1.54	2.99	4.72	5.51	2.95	1.26	1.26	0.51	4.15	1.54
88,184.9	1.80	1.54	2.99	7.09	5.91	3.15	1.46	1.46	0.51	4.17	1.54
110,231.1	2.22	1.73	3.90	11.02	7.01	3.70	1.34	1.34	0.67	5.08	1.73
220,462.3	2.76	2.44	3.90	14.96	7.87	3.94	1.34	1.34	0.67	5.08	2.44

SPECIFICATIONS

Full Scale Output	2.0 mV/V ± 0.1%	**Element Material**	2Cr13 Stainless Steel
Zero Balance	± 0.02 mV/V	**Recommended Excitation**	10V (15V Maximum)
Non-linearity	Cap.≤50t: < ± 0.023%; Cap.=100t: < ± 0.05%	**Insulation Resistance**	>2［50V DC］GΩ
		Compensated Temperature Range	-10°C to 50°C / 14°F to 122°F
Repeatability	< ± 0.017%	**Safe Overload**	150% of full scale
Hysteresis Error	Cap.≤50t: < ± 0.020%; Cap.=100t: < ± 0.05%	**Breaking Overload**	300% of full scale
		Seal Type / IP Rating	Welded Seal / IP68
Creep in 30 min.	< ± 0.020%	**Cable Color Code**	Exc+ Red Exc- Black Sig+ Green Sig- White Shield Bare
Input Resistance	1150 Ω ± 50		
Output Resistance	1000 Ω ± 2		

PART NUMBER*

Load Cell

Rated Capacity	Part No.	Weight Approx. (kg)
7.5t	106RS-7.5t-YZ	1.5
15t	106RS-15t-YZ	1.5
22.5t	106RS-22.5t-YZ	1.5
30t	106RS-30t-YZ	4.2
40t	106RS-40t-YZ	3.9
50t	106RS-50t-YZ	5.2
100t	106RS-100t-YZ	6.2

*ATEX, FM, IECEx approved versions carry the “-Ex” suffix.

INTERCHANGEABLE REFERENCE

Brand	Model
Coti Global	CG-26S6
FAIRBANKS	LCF HR4020-2A(30t), part number 70510
FLINTEC	RC3*

: Not included 100t

10t-50t: NTEP 1:10 000 Class IIIL, Multiple Cell

10t-50t: OIML MAA C3, Y=16 000

For further available P/N’s & specifications per NTEP/OIML classes, please contact us.

CANISTERS & DISKS

© 2026 ANYLOAD V2 • dimensions and specifications subject to change without notice

Mounting Cups
Type A:

Material of mounting cups and circular plate: alloy steel

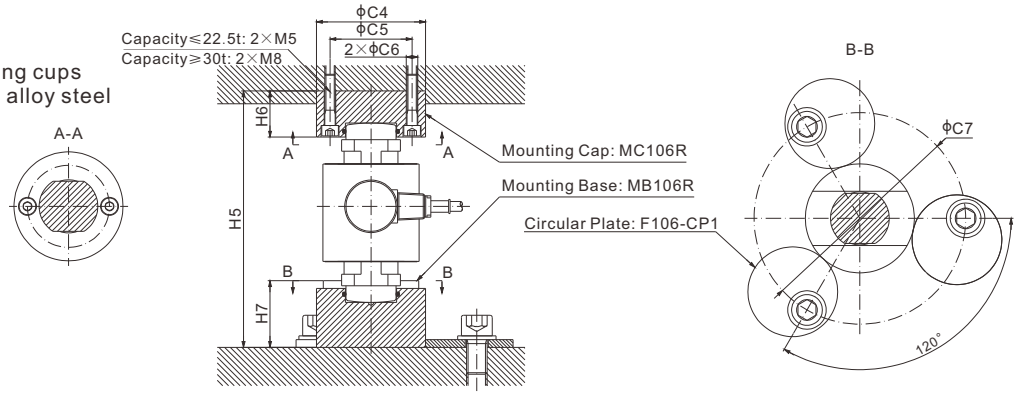

DIMENSIONS

RATED CAPACITY	C4	C5	C6	C7	H5	H6	H7
t/mm							
7.5–22.5	50.0	45.0	6.0	130.0	130.0	29.5	35.5
30	85.0	64.0	9.0	165.0	200.0	36.0	52.0
40	85.0	64.0	9.0	165.0	200.0	36.0	42.0
50	90.0	70.0	9.0	170.0	240.0	45.0	55.0
lb/inches (conversion of above dimensions)							
16,534.7–49,604.0	1.97	1.77	0.24	5.12	5.12	1.16	1.40
66,138.7	3.35	2.52	0.35	6.50	7.87	1.42	2.05
88,184.9	3.35	2.52	0.35	6.50	7.87	1.42	1.65
110,231.1	3.55	2.76	0.35	7.70	9.46	1.77	2.17

Rated Capacity**	Part Number Mounting Cap*	Weight Approx. (Kg)	Part Number Mounting Base*	Weight Approx. (Kg)
7.5t	MC106RH-(7.5-22.5)t	0.5	MB106RH-(7.5-22.5)t	0.5
15t				
22.5t				
30t	MC106RH-(30-40)t	1.4	MB106RH-30t	2.1
40t			MB106RH-40t	1.6
50t	MC106RH-50t	2.0	MB106RH-50t	2.2

* When ordering mounting hardware, each load cell needs 1 x cap, 1 x base, 3 x circular plates.
**Same circular plates for all capacities.
F106-CP1-H,self weight: 1.2 kg each (approx)

Mounting Cups
Type A1:

Material of mounting cups: alloy steel

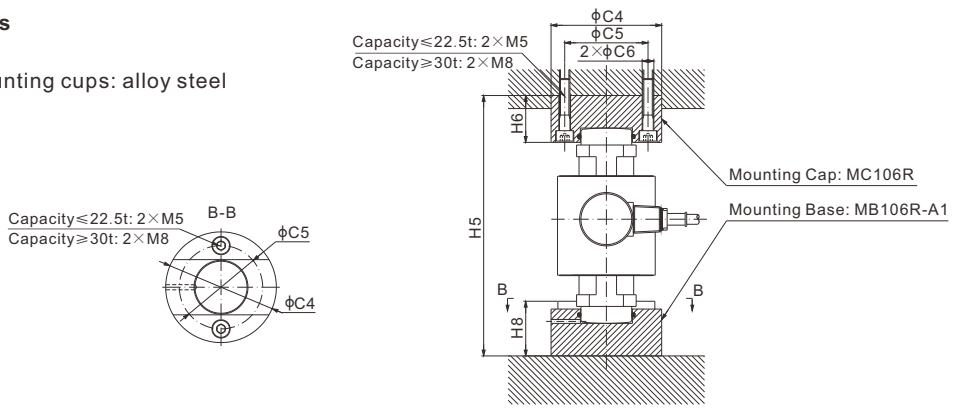

DIMENSIONS

RATED CAPACITY	C4	C5	C6	H5	H6	H8
t/mm						
7.5–22.5	50.0	45.0	6.0	130.0	29.5	35.5
30	85.0	64.0	9.0	200.0	36.0	52.0
40	85.0	64.0	9.0	200.0	36.0	42.0
50	90.0	70.0	9.0	240.0	45.0	55.0
lb/inches (conversion of above dimensions)						
16,534.7–49,604.0	1.97	1.77	0.24	5.12	1.16	1.40
66,138.7	3.35	2.52	0.35	7.87	1.42	2.05
88,184.9	3.35	2.52	0.35	7.87	1.42	1.65
110,231.1	3.55	2.76	0.35	9.46	1.77	2.17

Rated Capacity	Part Number Mounting Cap*	Weight Approx. (Kg)	Part Number Mounting Base*	Weight Approx. (Kg)
7.5t	MC106RH-(7.5-22.5)t	0.5	MB106RH-(7.5-22.5)t-A1	0.5
15t				
22.5t				
30t	MC106RH-(30-40)t	1.4	MB106RH-30t-A1	2.1
40t			MB106RH-40t-A1	1.6
50t	MC106RH-50t	2.0	MB106RH-50t-A1	2.2

* When ordering mounting hardware, each load cell needs 1 x cap, 1 x base.

© 2026 ANYLOAD V2 • dimensions and specifications subject to change without notice

Mounting Cups
Type B:

Material of mounting cups and circular plate: alloy steel

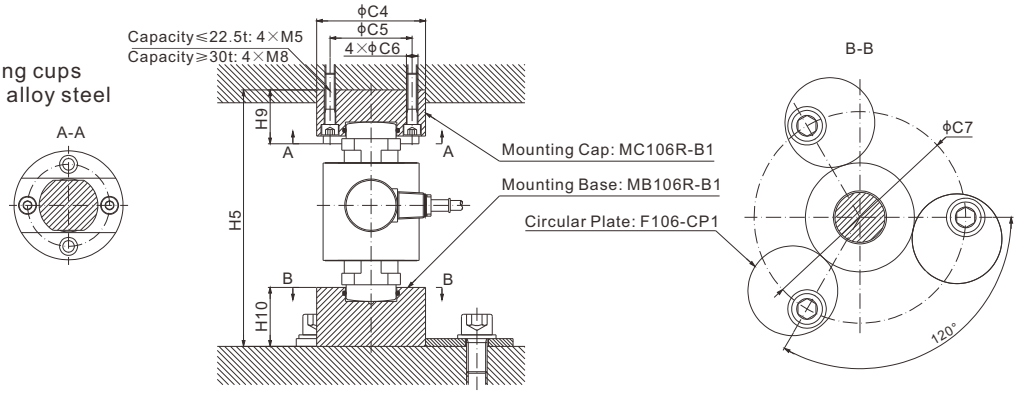

DIMENSIONS

RATED CAPACITY	C4	C5	C6	C7	H5	H9	H10
t/mm							
7.5–22.5	50.0	45.0	6.0	130.0	130.0	35.5	29.5
30	85.0	64.0	9.0	165.0	200.0	42.0	46.0
40	85.0	64.0	9.0	165.0	200.0	42.0	36.0
50	90.0	70.0	9.0	170.0	240.0	55.0	45.0
lb/inches (conversion of above dimensions)							
16,534.7–49,604.0	1.97	1.77	0.24	5.12	5.12	1.40	1.16
66,138.7	3.35	2.52	0.35	6.50	7.87	1.65	1.81
88,184.9	3.35	2.52	0.35	6.50	7.87	1.65	1.42
110,231.1	3.55	2.76	0.35	7.70	9.46	2.17	1.77

Rated Capacity**	Part Number Mounting Cap*	Weight Approx. (Kg)	Part Number Mounting Base*	Weight Approx. (Kg)
7.5t	MC106RH-(7.5-22.5)t-B1	0.5	MB106RH-(7.5-22.5)t-B1	0.5
15t				
22.5t				
30t	MC106RH-(30-40)t-B1	1.4	MB106RH-30t-B1	2.1
40t			MB106RH-40t-B1	1.6
50t	MC106RH-50t-B1	2.0	MB106RH-50t-B1	2.2

* When ordering mounting hardware, each load cell needs 1 x cap, 1 x base, 3 x circular plates.
**Same circular plates for all capacities.
F106-CP1-H, self weight: 1.2 kg each (approx)

© 2026 ANYLOAD V2 • dimensions and specifications subject to change without notice

Product Datasheet Disclaimer

Information Changes:
All product specifications, statements, information, and data (collectively, the "Information") in this catalog or made available elsewhere by ANYLOAD are subject to change. Customers must verify the applicability of the Information at the time of order placement.

Accuracy and Reliability:
While all Information is believed to be accurate and reliable, it is presented without guarantee, warranty, or responsibility of any kind, expressed or implied.

Laboratory Conditions:
Data listed in the datasheet is produced within controlled laboratory settings and may not be reproducible without exact replication of all metrological conditions. Users must validate that a product with the described properties is suitable for their applications.

Interchangeability:
Statements of interchangeability with other manufacturers are based on ANYLOAD's knowledge at the time of publication and are not intended to constitute any warranty concerning the substitutability of an ANYLOAD product with one made by another Manufacturer.

Warranty Voidance:
Any use of the product outside of specifications or any storage or installation inconsistent with product guidance voids any warranty.

Intended Use:
The information is intended for use only by customers who have the requisite experience and capability to determine the correct products for their application. ANYLOAD provides technical advice without obligation or liability for the advice given or results obtained.

Component Failures:
Although ANYLOAD designs and manufactures its products to stringent quality and safety standards, isolated component failures may still occur. Applications requiring high reliability or safety should employ suitable designs or safeguards to ensure that component failure does not result in personal injury or property damage.

High-Risk Applications:
Unless specifically agreed to in writing, ANYLOAD has not tested or certified its products, services, or deliverables for use in high-risk applications (e.g., medical life support, nuclear facilities, weapon systems). ANYLOAD makes no assurances that the products are suitable for high-risk uses. Under no circumstances does ANYLOAD warrant or guarantee suitability for any customer design or manufacturing process.

Contact authorized ANYLOAD personnel for special terms and conditions regarding products designed for specific safety requirements.

Safety Measures:
All product-related warnings, cautions, and notes must be observed. Customers should not assume that all safety measures are indicated or that other measures may not be required.

California Proposition 65:

⚠ **WARNING:** Some products manufactured or distributed by ANYLOAD may contain trace amounts of chemicals known to the State of California to cause cancer, birth defects, or other reproductive harm. These substances are present in minimal quantities and are typically encapsulated within our products. This warning is provided to enable you to make informed decisions as a consumer.

© 2026 ANYLOAD V1 • dimensions and specifications subject to change without notice