651KS22; 651KSGS

Stainless Steel

651KS22

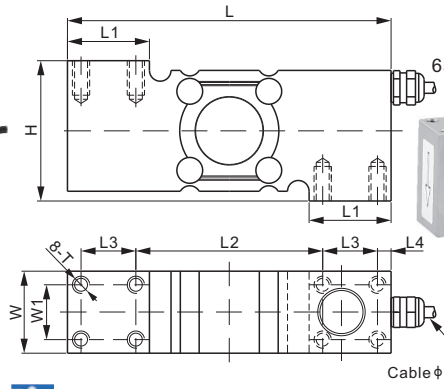

651KSGS

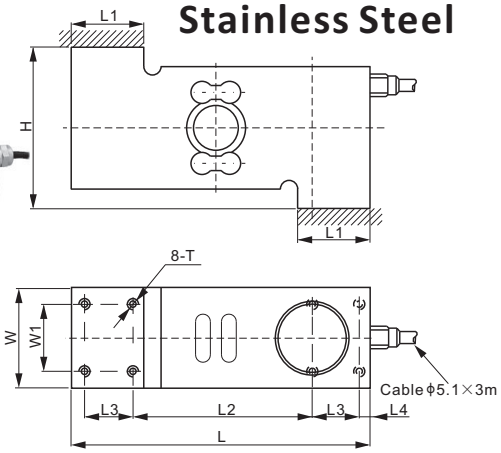

RoHS

DIMENSIONS

RATED CAPACITY	H	L	L1	L2	L3	L4	W	W1	T
651KS22: kg/mm									
50–500	65.0	150.0	38.0	86.6	25.4	6.3	38.0	25.4	M8 Depth16
lb/inches (conversion of above dimensions)									
110.2–1102.3	2.56	5.91	1.50	3.41	1.00	0.25	1.50	1.00	M8 Depth0.63
651KSGS: kg/mm									
100–250	73.0	150.0	38.1	86.5	25.4	6.4	38.0	25.4	M8 Depth12
lb/inches (conversion of above dimensions)									
220.5–551.2	2.87	5.91	1.50	3.41	1.00	0.25	1.50	1.00	M8 Depth0.47

SPECIFICATIONS

Full Scale Output	2.0 mV/V ± 10%	**Recommended Excitation**	10V (15V Maximum)
Zero Balance	± 0.02 mV/V	**Reference Max.Platform Size**	600×600 mm
Non-linearity	651KS22: < ± 0.03%; 651KSGS: < ± 0.05%	**Insulation Resistance**	>2 [50V DC] GΩ
Repeatability	< ± 0.02%	**Compensated Temperature Range**	-10°C to 50°C / 14°F to 122°F
Hysteresis Error	651KS22: < ± 0.03%; 651KSGS: < ± 0.05%	**Safe Overload**	150% of full scale
Creep in 30 min.	< ± 0.03%	**Breaking Overload**	300% of full scale
Input Resistance	385Ω ± 15	**Seal Type / IP Rating**	651KS22: Welded Seal / IP68/IP69K 651KSGS: Environmentally Sealed / IP66
Output Resistance	350Ω ± 3		
Element Material	17-4PH Stainless Steel	**Cable Color Code**	Exc+ Red Exc- Black Sig+ Green Sig- White Shield Bare

PART NUMBER*

Rated Capacity	Part No.	Weight (kg) Approx.
50kg	651KS22-50kg	2.3
100kg	651KS22-100kg	2.3
	651KSGS-100kg	2.5
250kg	651KS22-250kg	2.3
	651KSGS-250kg	2.5
500kg	651KS22-500kg	2.3

651KS22-50kg: NTEP 1:10 000 Class III, Single Cell;
651KS22-100kg,250kg &500kg: NTEP 1:5 000 Class III, Single Cell;

651KS22-50kg & 100kg: OIML MAA C9, Y=18 000;
651KS22-250kg & 500kg: OIML MAA C4, Y=26 000

* ATEX, FM, IECEx approved versions carry the "-Ex" suffix.

INTERCHANGEABLE REFERENCE

651KS22

Manufacturer	Model
Flintec	PC7*
Mettler-Toledo	SSH
Vishay Tedea-Huntleigh	1510*

** H of Flintec PC7 & Tedea 1510 are of 73mm.*

SINGLE POINTS

© 2023 ANYLOAD V1 dimensions and specifications subject to change without notice